TECHSPEC® 100mm C VIS-NIR Series Fixed Focal Length Lens

#27-555

100mm C VIS-NIR Series Fixed Focal Length Lens

TECHSPEC® C Series Fixed Focal Length VIS-NIR Lenses are designed for use in machine vision applications that require NIR or VIS-NIR performance, with the working distance and resolution requirements of factory automation and inspection in mind. Featuring large maximum apertures and a Broadband Anti-Reflection (BBAR) coating designed out to 1000nm, these high performance lenses can be used in even the most restrictive lighting conditions. TECHSPEC® C Series Fixed Focal Length VIS-NIR Lenses are manufactured to a high tolerance, resulting in greater levels of imaging performance and low lens-to-lens variation, assuring simple installing into multiple systems. By combining high optical performance, industrial features, and small package size, the C Series Fixed Focal Length VIS-NIR Lenses represent a new standard in factory automation optics.

Also available with a VIS Broadband Anti-Reflection (BBAR) or SWIR Coatings

Note: For IR imaging alone, UV-VIS Cut Filtersare available and thread directly onto the front filter threads of the 4.5mm, 16mm, 25mm, 35mm and 50mm FL lenses.

Phone: 1-800-363-1992 or 1-856-573-6250, Fax: 1-856-573-6295
101 EAST GLOUCESTER PIKE | P.O BOX 9000
BARRINGTON, NJ 08007-1380 USA

General

Product Family:	C VIS-NIR Series
Type:	Fixed Focal Length Lens
Imaging Lens Type:	Compact Lens Coated for Visible to Near Infared

Physical & Mechanical Properties

Iris Option:	Variable
Length (mm):	92.10
Maximum Diameter (mm):	32.0
Outer Diameter (mm):	52
Weight (g):	257
Maximum Rear Protrusion (mm):	7

Optical Properties

Horizontal Field of View @ Max Sensor Format:	9.7°
Field of View at Max Sensor Format:	Horizontal: 9.8° Vertical: 7.4° Diagonal: 12.1°
Horizontal Field of View, 4/3" Sensor:	9.8°
Horizontal Field of View, 1.1" Sensor:	8.0°
Horizontal Field of View, 1" Sensor:	7.2°
Horizontal Field of View, 2/3" Sensor:	5.0°
Horizontal Field of View, 1/1.8" Sensor:	4.1°
Horizontal Field of View, 1/2" Sensor:	3.6°
Horizontal Field of View, 1/2.5" Sensor:	3.3°
Horizontal Field of View, 1/3" Sensor:	2.7°
Horizontal Field of View, 1/4" Sensor:	2.0°
Maximum Image Circle (mm):	21.60
Numerical Aperture NA, Object Side:	0.0228
Number of Elements (Groups):	7 (6)
Focal Length FL (mm):	100.00
Working Distance (mm):	750 - ∞
Aperture (f/#):	f/2.8 - f/22
Coating:	425 - 1000nm BBAR
Coating Specification:	425 - 1000nm BBAR
Entrance Pupil Position (mm):	31.42
Object Space Principal Plane (mm):	-25.65
Image Space Principal Plane (mm):	-86.83
Maximum Distortion (%):	1.6
Exit Pupil Position (mm):	-50.5
Lens Wavelength Range:	VIS-NIR

Sensor

Maximum Sensor Format:	4/3"
Pixel Size (µm):	2.74

Edmund optics | worldwide
Phone: 1-800-363-1992 or 1-856-573-6250, Fax: 1-856-573-6295
101 EAST GLOUCESTER PIKE | P.O BOX 9000
BARRINGTON, NJ 08007-1380 USA

Threading & Mounting

Filter Thread:	M46 x 0.75 (Female)
Mount:	C-Mount

Environmental & Durability Factors

Storage Temperature (°C):	-20 to +60 For questions regarding operating temperature please contact our support team

Phone: 1-800-363-1992 or 1-856-573-6250, Fax: 1-856-573-6295
101 EAST GLOUCESTER PIKE | P.O BOX 9000
BARRINGTON, NJ 08007-1380 USA

April 16, 2026

Stock No.	Description
27-555	100mm C VIS-NIR Series Fixed Focal Length Lens

Edmund Optics certifies that all articles included in this shipment are in compliance with the terms and conditions of this order. The company also certifies that the articles included in this shipment are in accordance to all agreed upon specifications and quality assurance provisions. Please call 1-800-363-1992 should any questions arise from this shipment.

Jeff Harvey- EVP of Operations

Phone: 1-800-363-1992 or 1-856-573-6250, Fax: 1-856-573-6295
101 EAST GLOUCESTER PIKE | P.O BOX 9000
BARRINGTON, NJ 08007-1380 USA

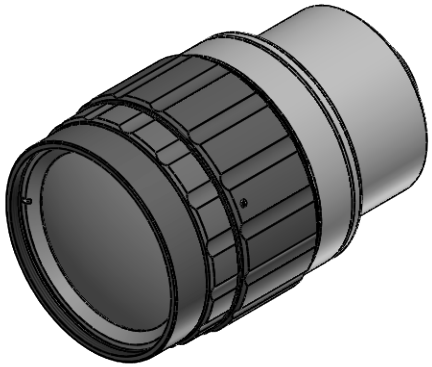

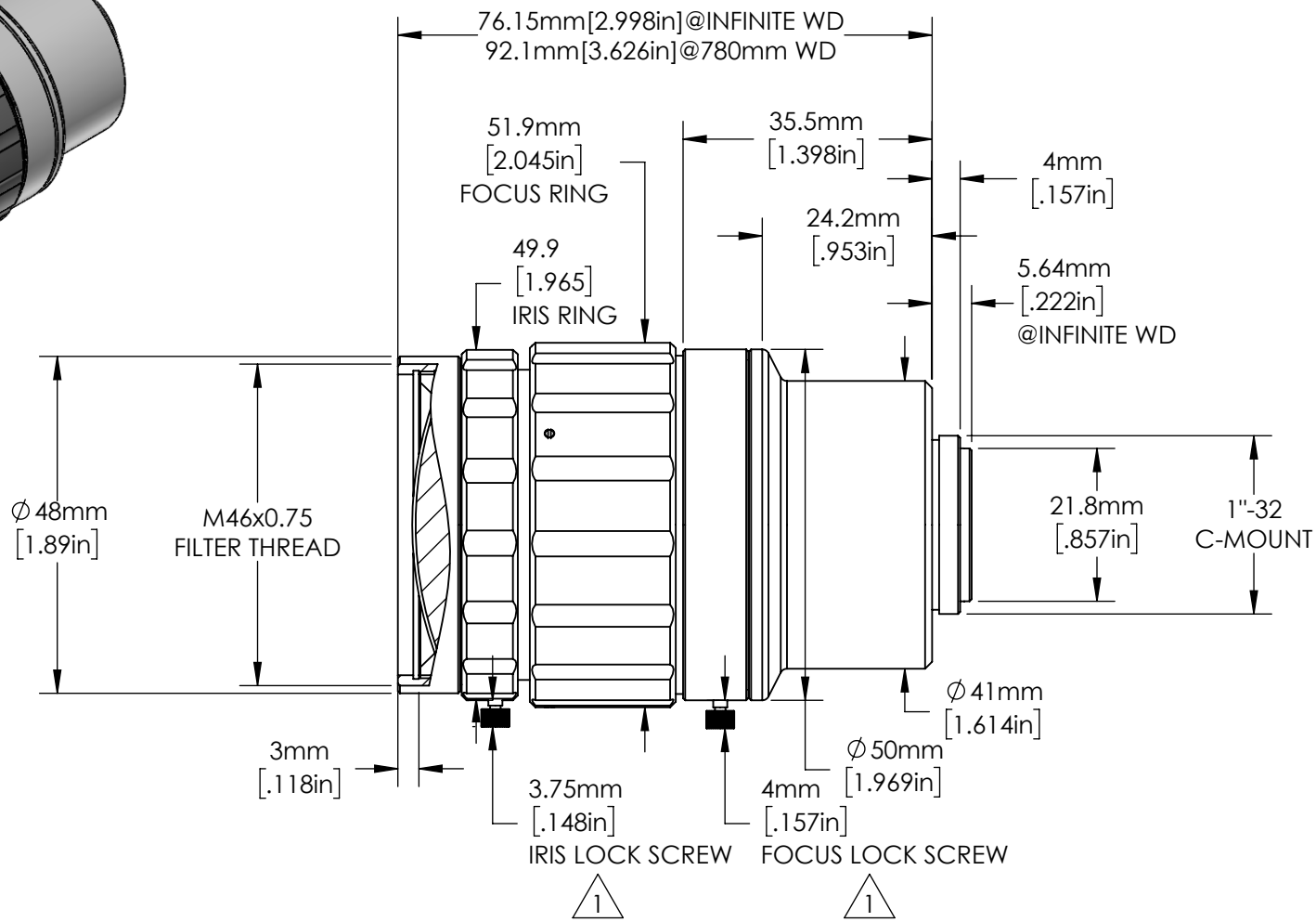

NOTES:

1. ALSO INCLUDES RECESSED SET SCREW OPTION.
2. LENS MAY MOVE MORE THAN INDICATED UNTIL IT REACHES BUILT-IN STOPS.
3. LENS SHOWN IN INFINITE WD POSITION.

FOR INFORMATION ONLY:

DO NOT MANUFACTURE PARTS TO THIS DRAWING

SPECIFICATIONS SUBJECT TO CHANGE WITHOUT NOTICE.
DIMENSIONS ARE FOR REFERENCE ONLY.
FOR DETAILED SPECIFICATIONS, PLEASE REFER TO THE SPEC SHEET.

Edmund Optics®

TITLE	100mm C Series Fixed Focal Length Lens		
DWG NO	86410		SHEET 1 OF 1